2013MY Fusion



Integrated Plastic Bracket for Hood Bump-stop and Headlamp Attachments

Team:

Marwan El-Bkaily
Bill Sherwood
Alan Osterman
Chang Lee
Sudip Bhattacharjee
Carlos Perez
James Lee

Acknowledgment:

The team likes to acknowledge the following:

System Supplier:	**Gari Schalte**	**Magna Exterior & Interior**
Molder/Processor:	**Gari Schalte**	**Magna Exterior & Interior**
Toolmaker:	**Len Debono**	**Advantage Mold**
Material Supplier	**Erasmo Aguilar**	**Styron Plastics**

Integrated Plastic Bracket for Hood Bump-stop and Headlamp Attachments

New Requirement

Pedestrian Protection (Ped pro) is a new requirement for the US Market:

- United Nation published the Global Technical Requirement No. 9 (GTR 9) in 2008
- NHTSA is expected to publish new FMVSS publication by Sep 2013
- It will be effective starting Sep 2016 with a phase-in plan of four years
- This requirement is intended to mitigate the risk of injury for child or adult pedestrian impacted by a motor vehicle with a relative speed of 40 km/h

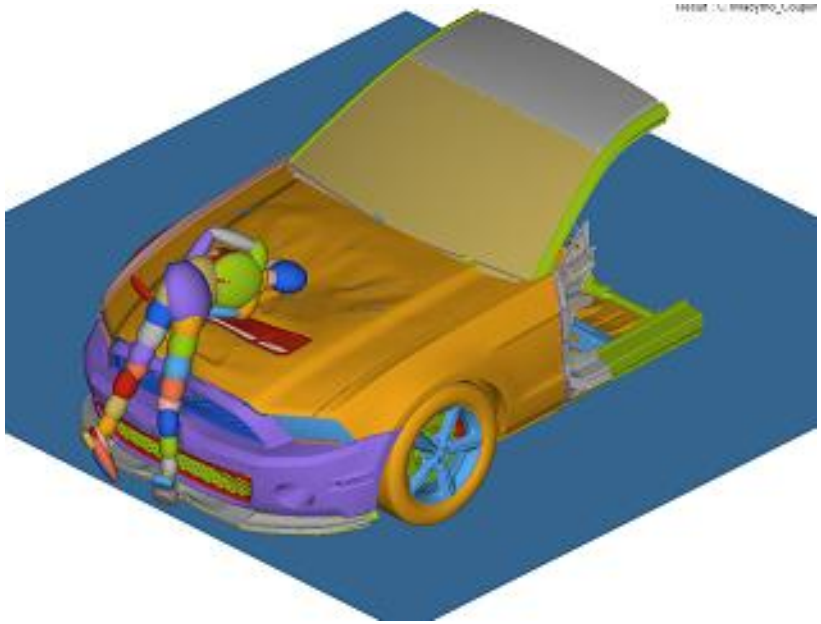

Integrated Plastic Bracket for Hood Bump-stop and Headlamp Attachments

Problem statement:

- Hood bump-stops together with headlamps, provide stiff resistance to hood structure when impacted with a pedestrian head impactor
- This impact causes high Head Injury Criterion (HIC) values due to reaction forces from these two break-away components
- Other factors affects the performance for 2013MY Fusion are hood material (Aluminum), **hood shape**, and **challenging package space**

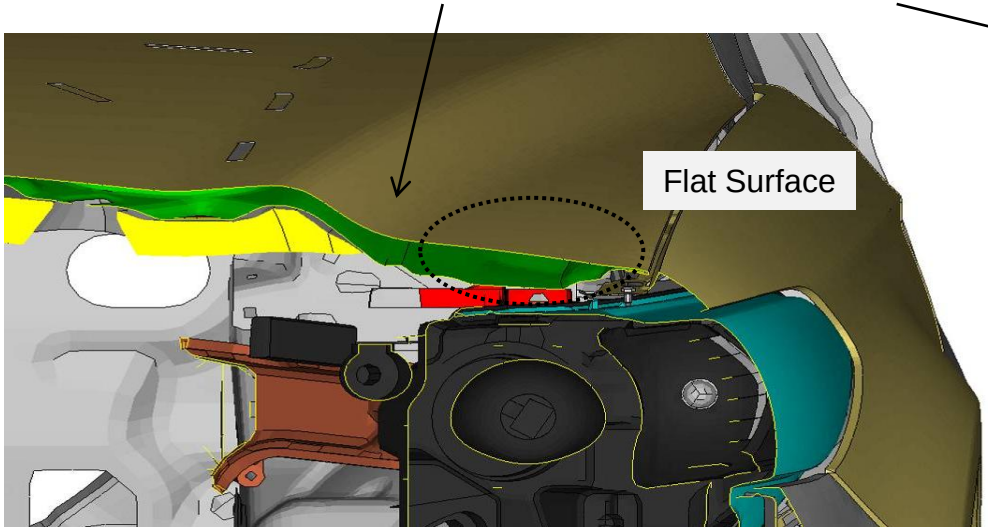

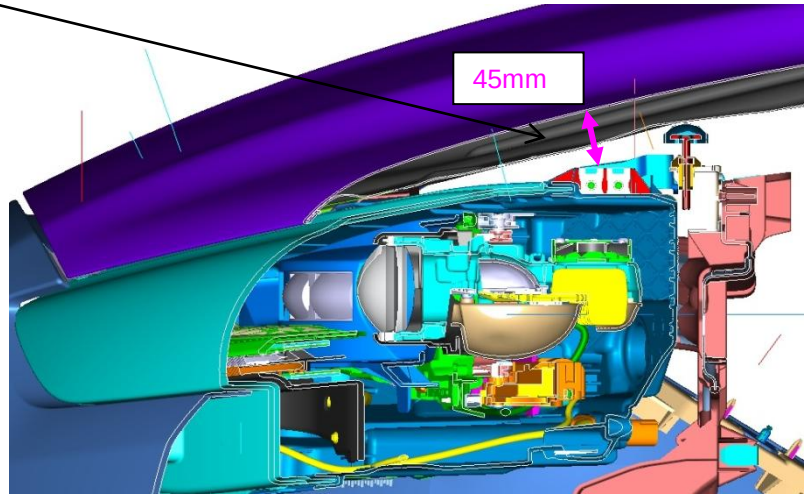

Integrated Plastic Bracket for Hood Bump-stop and Headlamp Attachments

Traditional design: separate hood bump-stop and headlamp attachment brackets

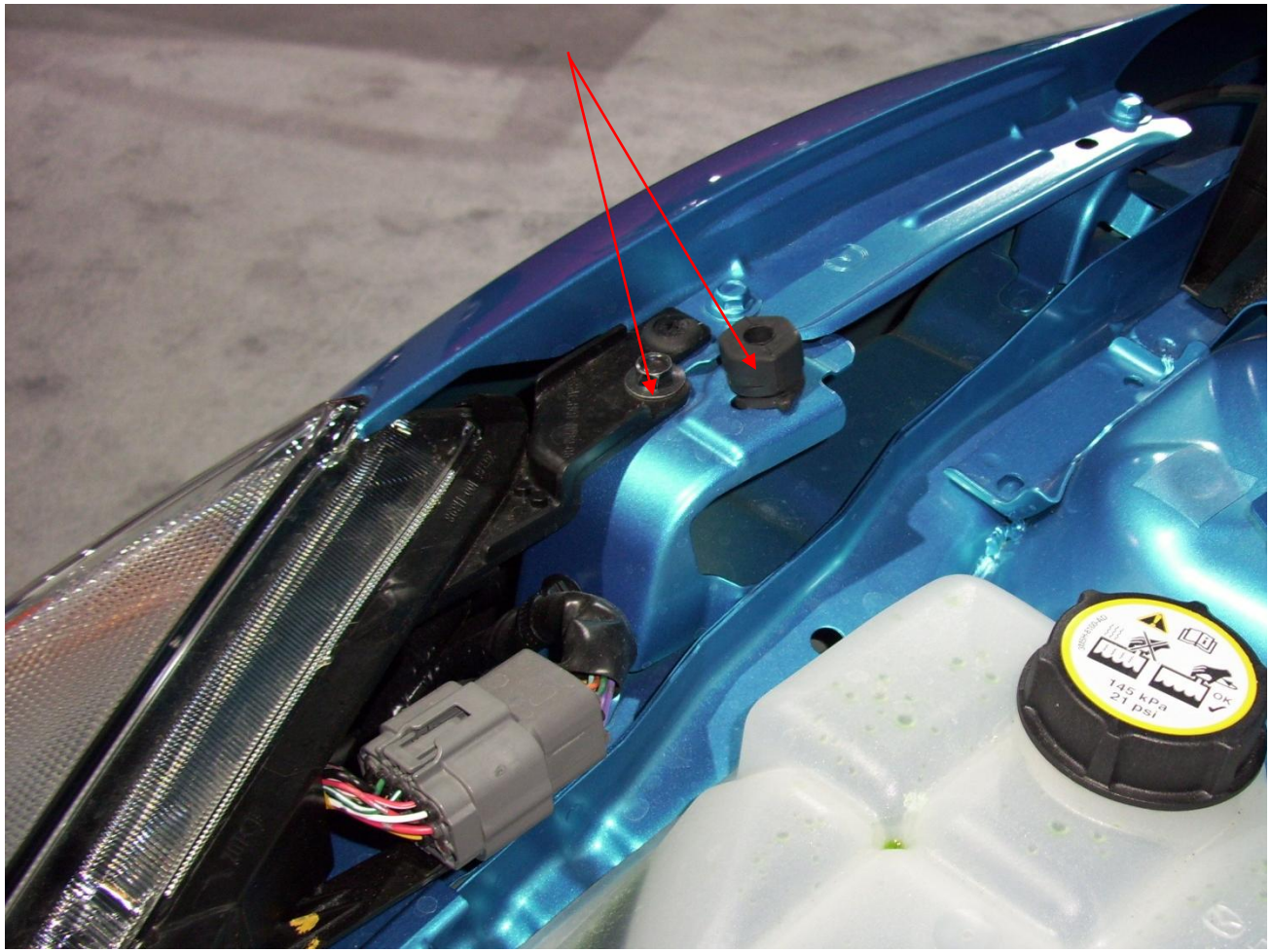

Integrated Plastic Bracket for Hood Bump-stop and Headlamp Attachments

Innovative design: Integrate hood bump-stop and headlamp attachments into one **plastic** bracket

Material Spec: 30% GF PP

T1 Supplier: Magna Exterior & Interior

Mat. Supplier: Styron Plastics

Design advantages:

- Innovative (patent # 83161137)
- More efficient (1 part in lieu of 2)
- Tunable: because of plastic, it is tuned for wide impact zone
- Common: can be used on other veh. w/ unique break-away load
- Reduce complexity (assembly)
- Vehicle compliance: reduce hood stiffness to meet Pedpro Req.



Design significance: Without this innovative use of plastic mat., Pedpro req. can't be met

Integrated Plastic Bracket for Hood Bump-stop and Headlamp Attachments

Integrated Bracket and Attached Parts

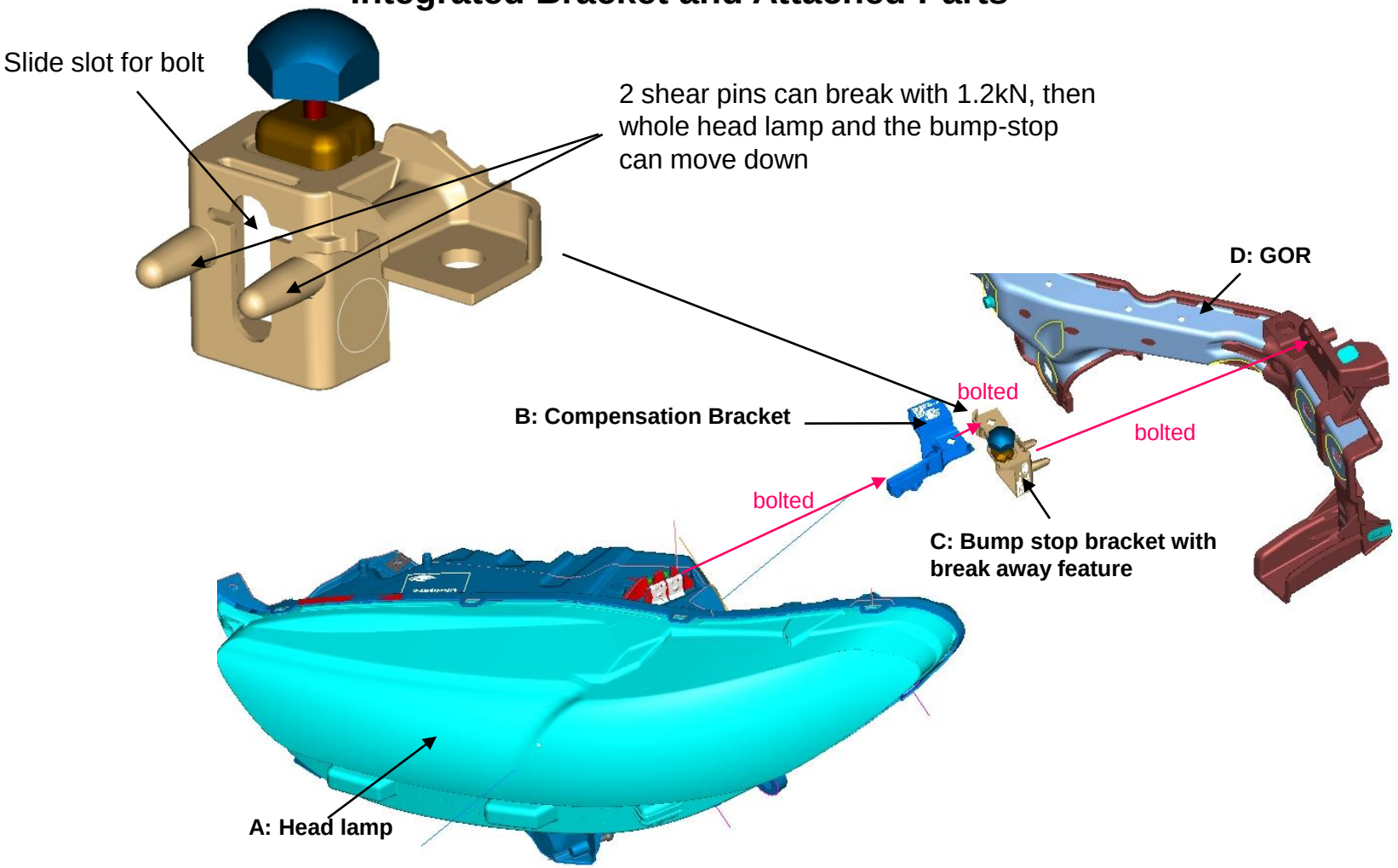

Integrated Plastic Bracket for Hood Bump-stop and Headlamp Attachments

AUTOMOTIVE SPE® INNOVATION AWARDS COMPETITION & GALA
HONORING THE BEST IN AUTOMOTIVE PLASTICS

Effect of integrated Plastic Bracket with break away feature on HIC

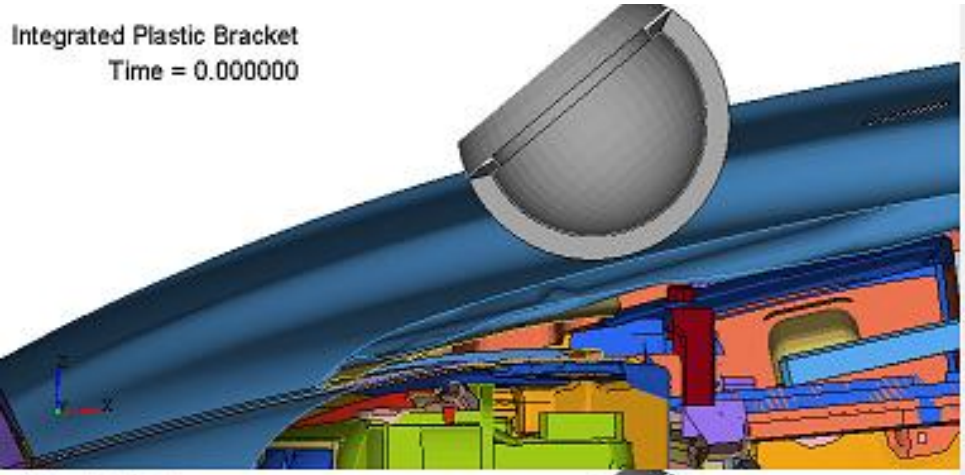

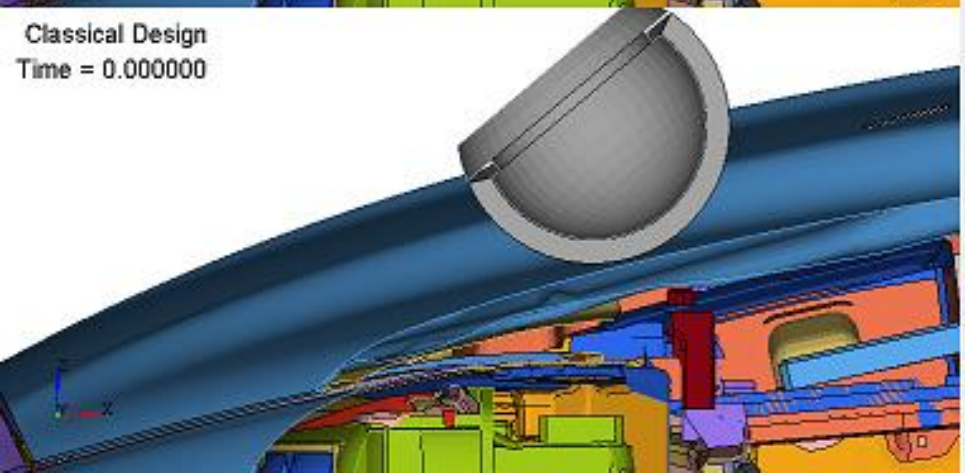

Acceleration reduction due to bump-stop break

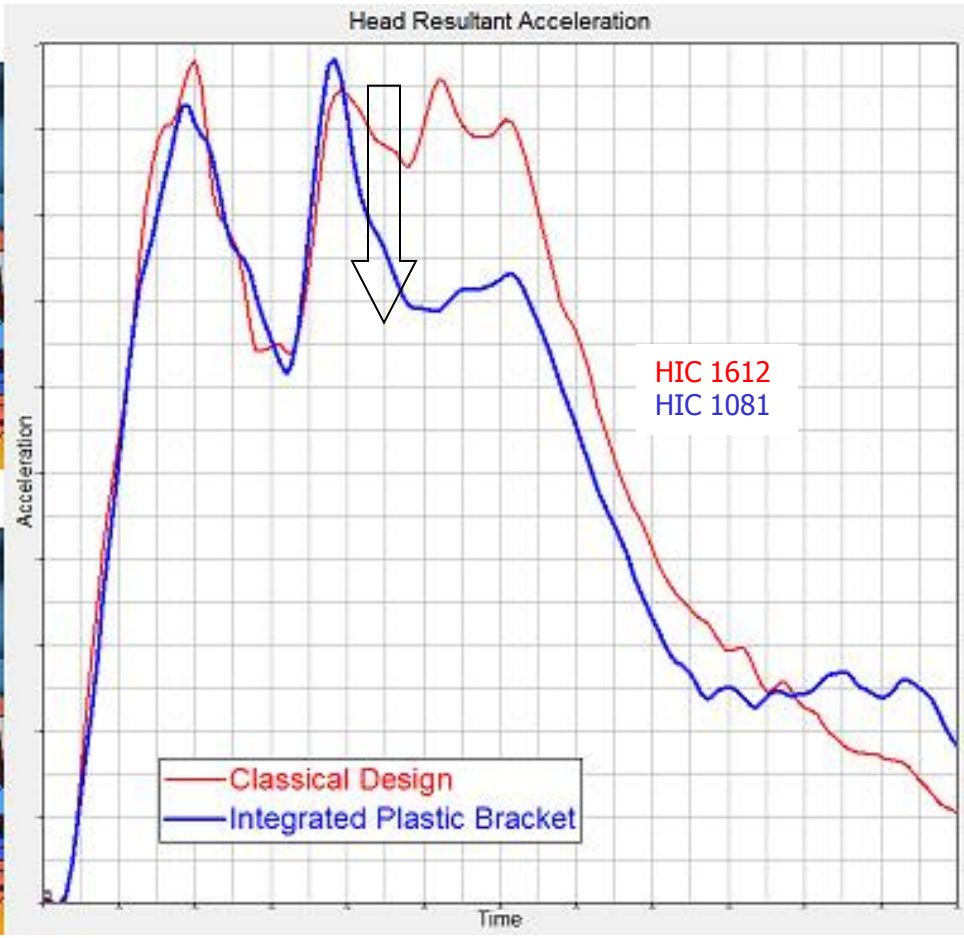

Conclusion:

- Using this integrated plastic bracket reduces the HIC by about 30% of its original values which met the new Pedpro requirement.
- Pedpro full vehicle testing confirms the reduction of HIC with the new design
- The new design is innovative, more efficient, tunable for any break-away load level, reusable for other vehicles, and simplifies the assembly process

Without this innovative use of plastic material, Pedpro requirement can't be met